36" BRIDGETTE VANITY

190.143.0327

EDWARD MARTIN

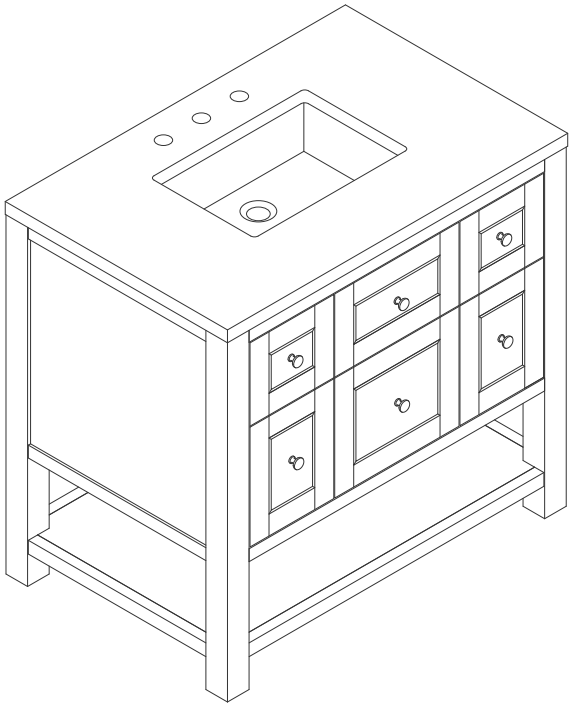

Features and Materials

Solids: GW/SC/SRB-Yellow Poplar; LNO/WWO-Ash and Yellow
Poplar Veneers: LNO/WWO-Flat Cut Ash
Panels: Plywood
Installation Type: Floor Standing
Number of Basins: One, with Optional 3cm Top
Vanity Top Included: NO, Optional 3cm Tops Available with Sinks
Basins Included: NO
Overflow: Yes, Front Facing
Number of Doors: One
Number of Drawers: Two
Number of Tip Outs: Two
USB/Power Component: YES (ETL5011080)
Cord Length: 6'6"
Assembly Type: Installation of Optional 3cm Top with Sink
Drawer Box Material and Construction: 12mm Plywood/English Dovetail Joinery
Hardware Material and Finish: BW/SC-Zinc Alloy in Champagne Brass Color;
LNO-Zinc Alloy in Matte Black Color; WWO/SRB-Zinc Alloy in Satin Nickel Color
Fits Drain Hole Size: 1 3/4"
Full Extension, Soft Close Glides
European Soft Close Hinges
Aluminum Laminate Drawer Liners
Adjustable Levelers

Dimension

Width: 35-7/8"
Depth: 23-1/2"
Height: 33"
Rough-In Height: 21-1/2"

36" BRIDGETTE VANITY

190.143.0327

EDWARD MARTIN

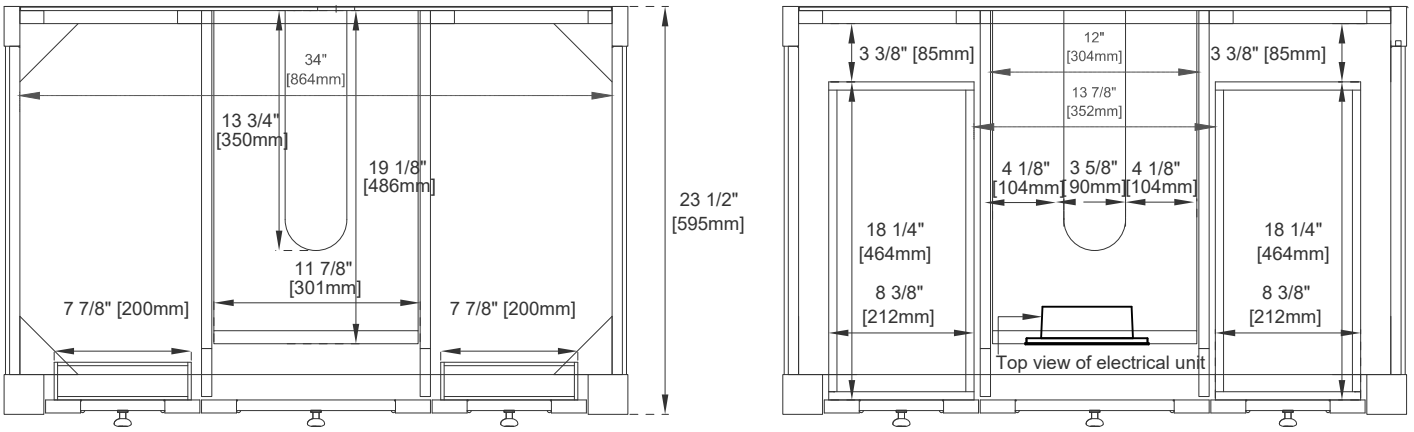

Top View

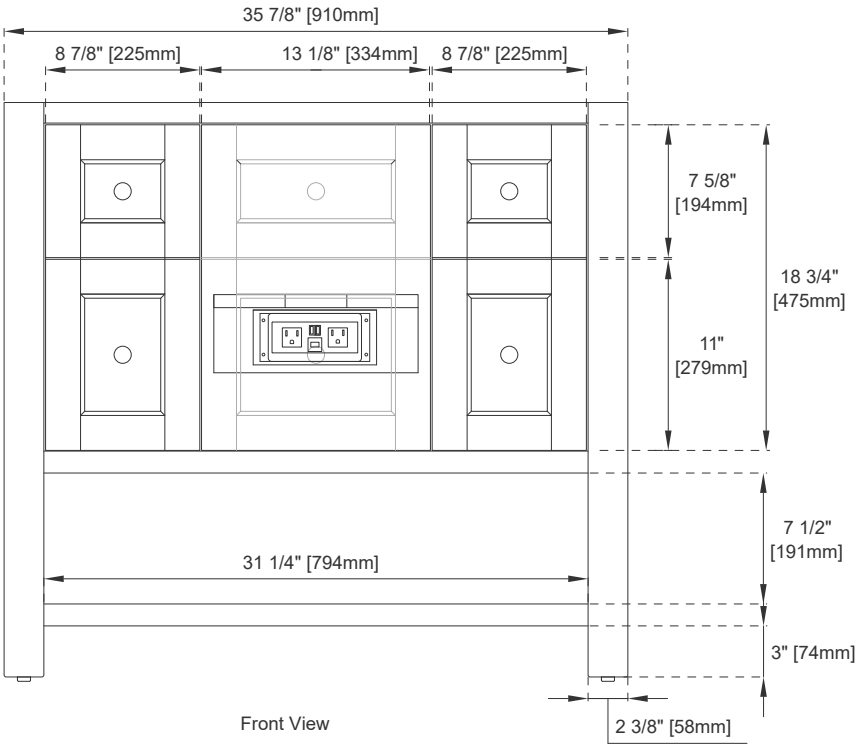

Front View

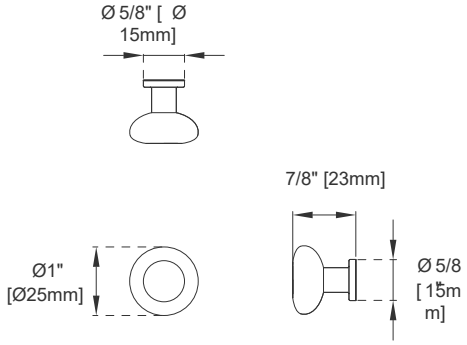

Knob

All dimensions and specifications are nominal and may vary. Use actual products for accuracy in critical situations. Diagrams are of cabinets only. Optional Countertops and sinks are not shown.

Version:202404

36" BRIDGETTE VANITY

190.143.0327

EDWARD MARTIN

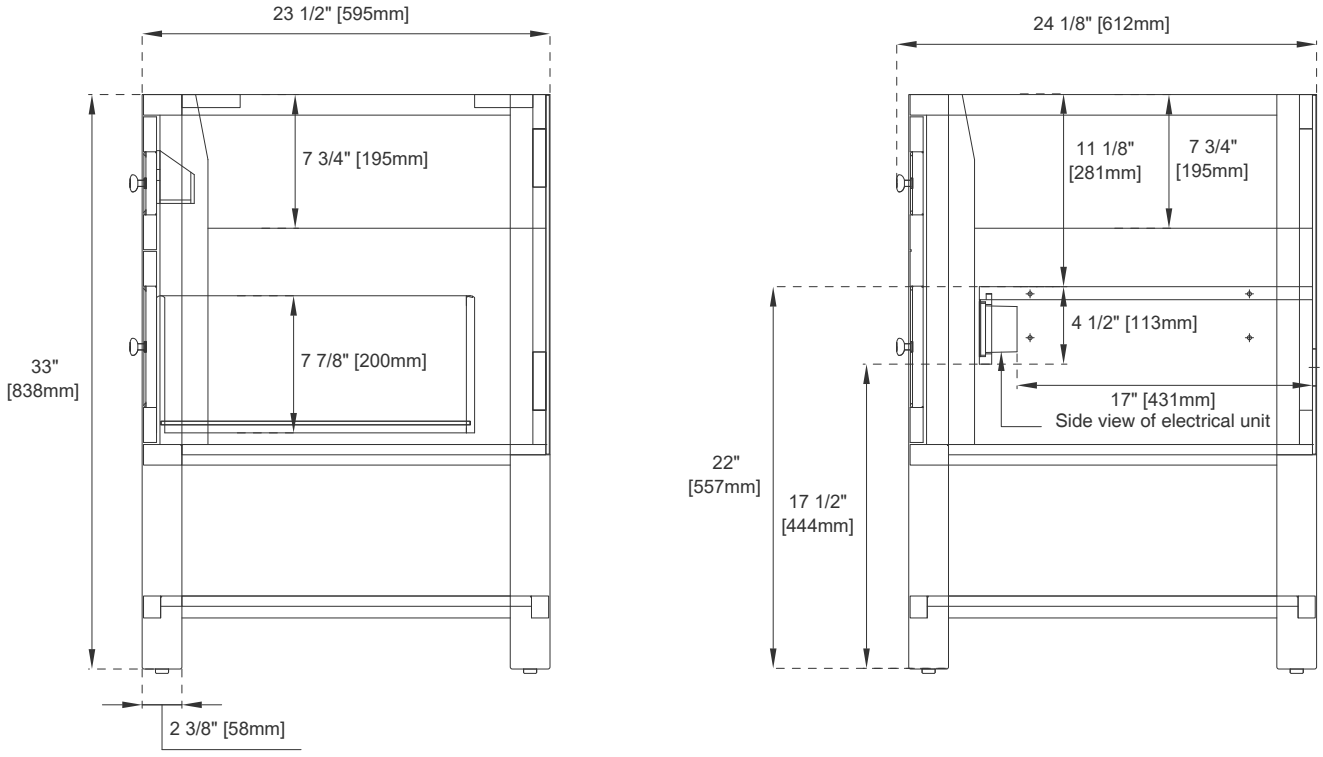

Side View

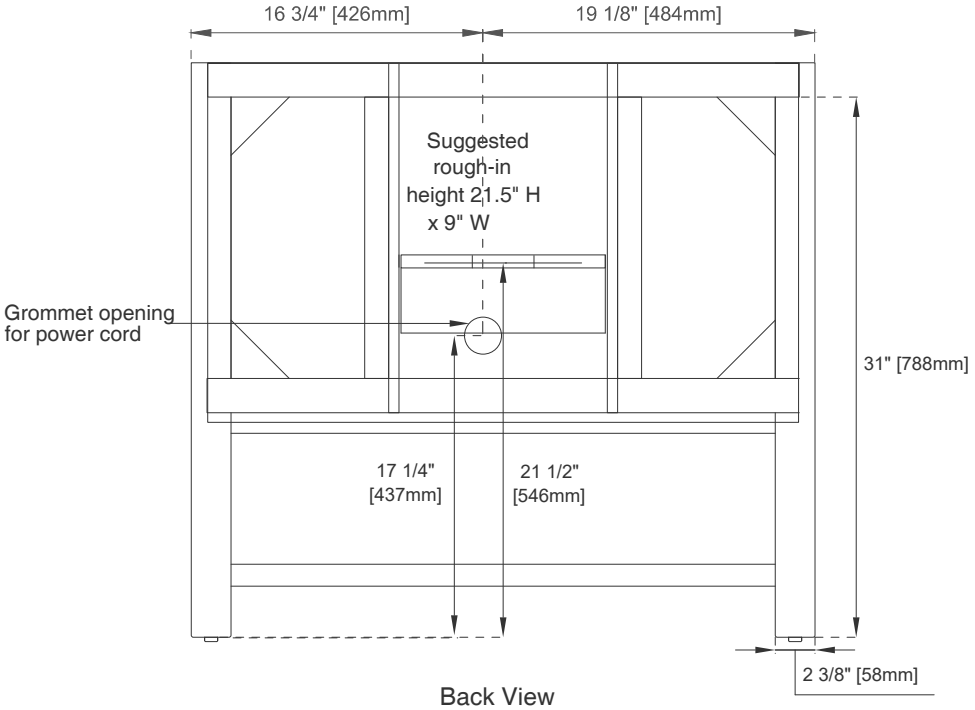

Back View

All dimensions and specifications are nominal and may vary. Use actual products for accuracy in critical situations. Diagrams are of cabinets only. Optional Countertops and sinks are not shown.