36" GABRIELLA VANITY

EDWARD MARTIN

190.143.0208

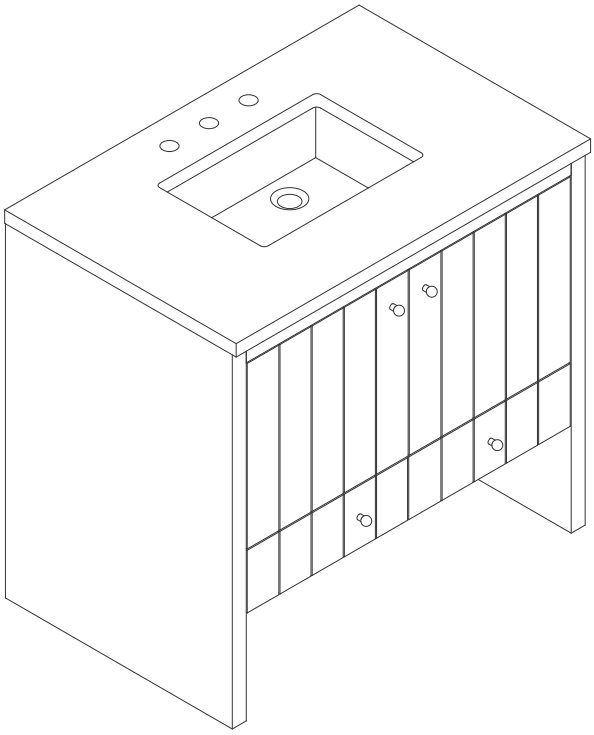

Features and Materials

Solids: Ash and Yellow Poplar
Veneers: Flat Cut Ash
Panels: Plywood
Installation Type: Floor Standing
Number of Basins: One, with Optional 3cm Top
Vanity Top Included: NO, Optional 3cm Tops Available with Sinks
Basins Included: NO
Overflow: Yes, Front Facing
Number of Doors: Two
Number of Drawers: One
Number of Tip Outs: 0
USB/Power Component: YES (ETL5011080)
Cord Length: 6'6"
Assembly Type: Installation of Optional 3cm Top with Sink
Bamboo Storage Tray: One
Drawer Box Material and Construction: 12mm Plywood/English Dovetail Joinery
Hardware Material and Finish: Zinc Alloy in Champagne Brass Color
Fits Drain Hole Size: 1 3/4"
Full Extension, Soft Close Glides
European Soft Close Hinges
Aluminum Laminate Drawer Liners
Adjustable Levelers

Dimension

Width: 35-7/8"
Depth: 23-1/8"
Height: 33"
Rough-In Height: 21-1/2"

36" GABRIELLA VANITY

EDWARD MARTIN

190.143.0208

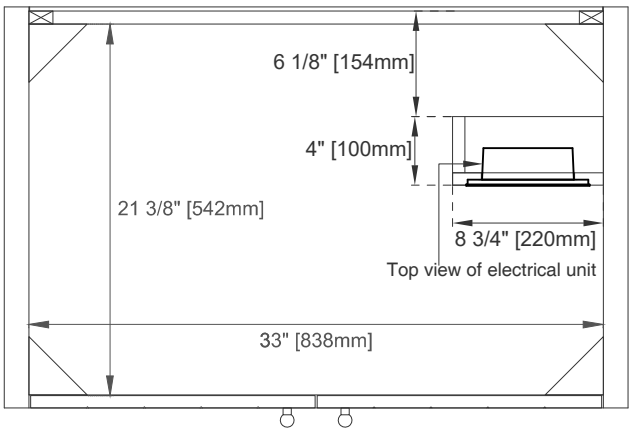

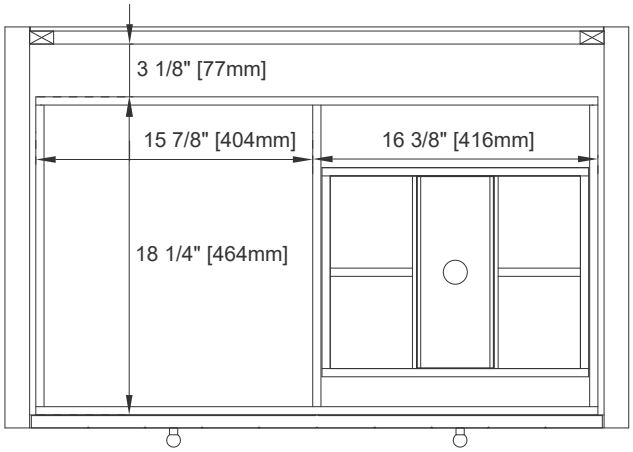

Top View

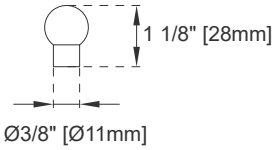

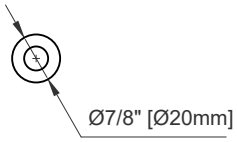

Knob

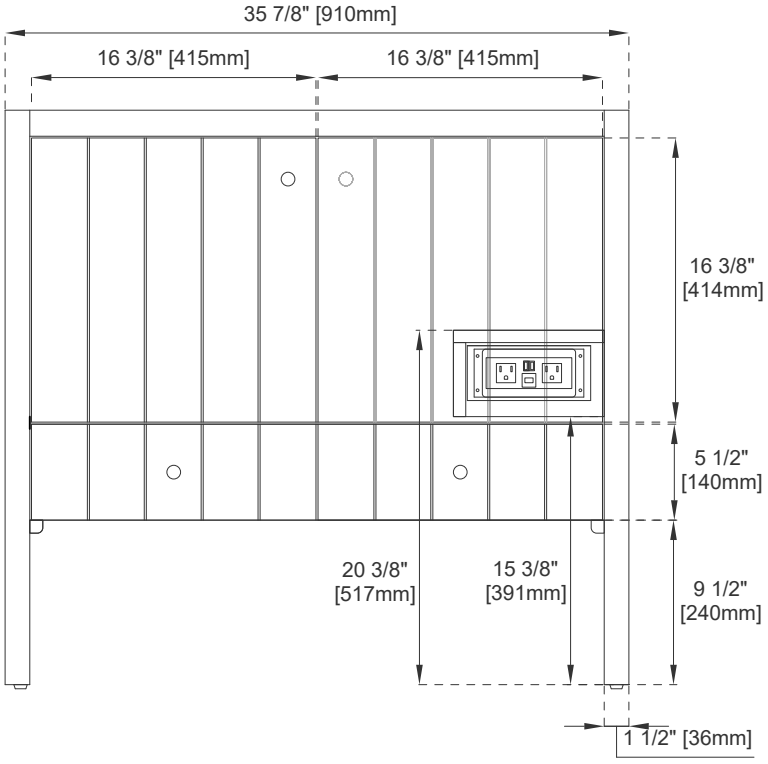

Front View

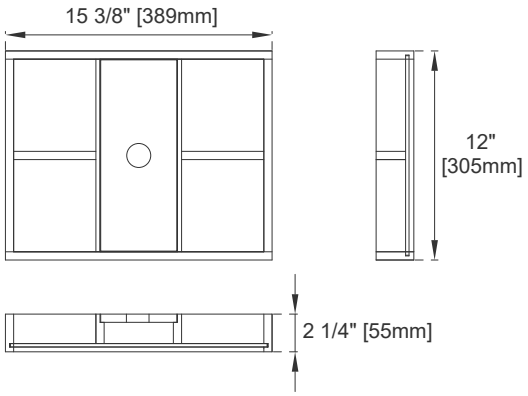

Bamboo Drawer Organizer

All dimensions are nominal.
Diagrams are of cabinet only. Optional Countertops and sinks are not shown.

36" GABRIELLA VANITY

EDWARD MARTIN

190.143.0208

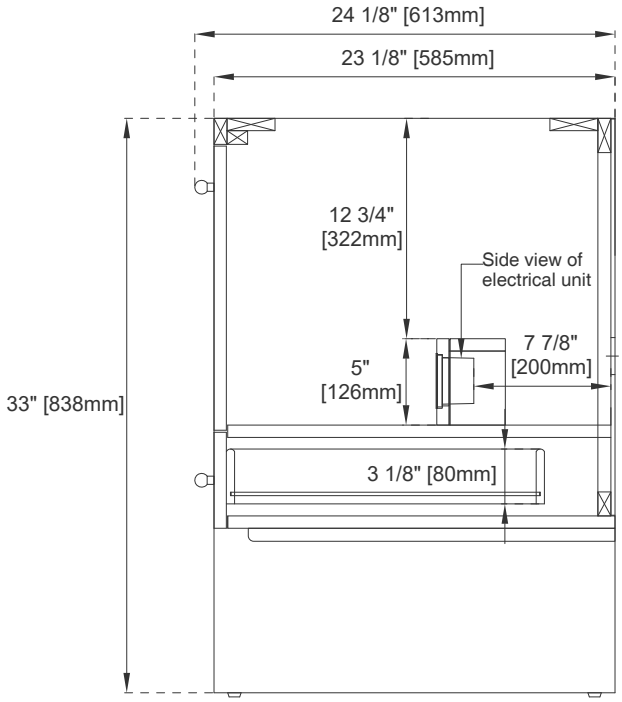

Side View

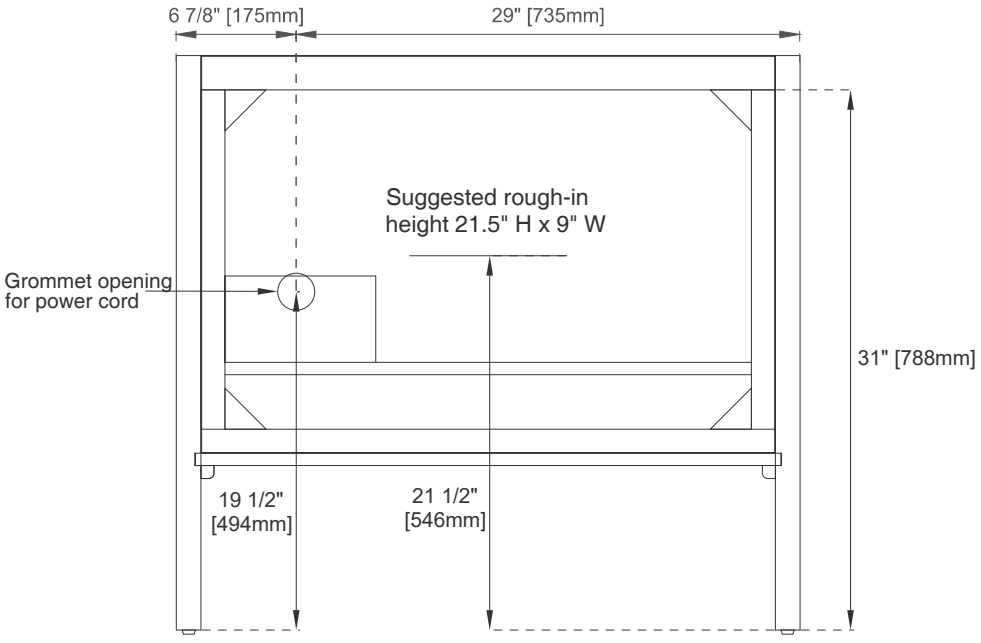

Back View

All dimensions are nominal.
Diagrams are of cabinet only. Optional Countertops and sinks are not shown.