36" ABIGAIL VANITY

EDWARD MARTIN

190.143.0158

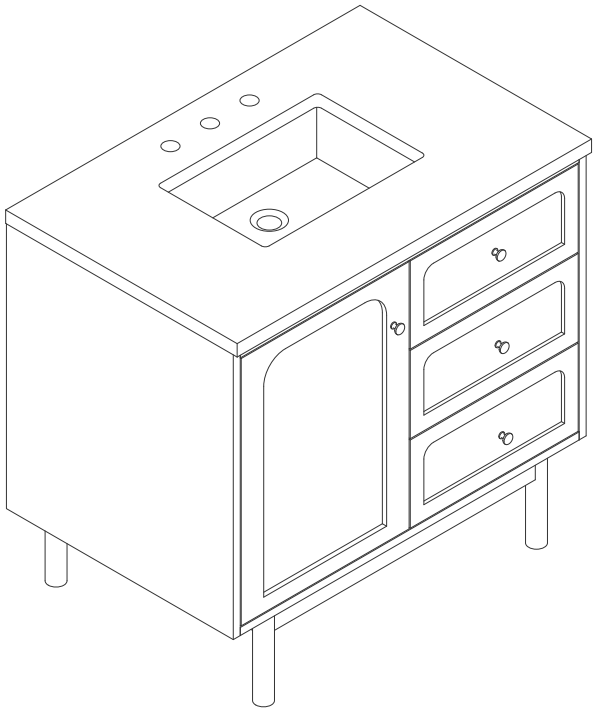

Features and Materials

Solids: Ash and Yellow Poplar
Veneers: Flat Cut Ash
Panels: Plywood
Installation Type: Floor Standing with Wood Base or Wall Mounted
Number of Basins: One, with Optional 3cm Top
Vanity Top Included : NO, Optional 3cm Tops Available with Sinks
Basins Included: NO
Overflow: Front Facing
Number of Doors: One
Number of Drawers: Two
Number of Tip Outs: One
USB/Power Component: YES (ETL5011080)
Cord Length: 6'6"
Assembly Type: Installation of Optional 3cm Top with Sink
Assembly Type: Remove Base to Wall Hang (hardware included)
Drawer Box Material and Construction: 12mm Plywood/English Dovetail Joinery
Hardware Material and Finish: Zinc Alloy in Champagne Brass Color
Fits Drain Hole Size: 1 3/4"
Full Extension, Soft Close Glides
European Soft Close Hinges
Aluminum Laminate Drawer Liners
Adjustable Levelers

Dimension

Width: 35-7/8"
Depth: 23"
Height: 33"
Rough-In Height: 21-1/2"

36" ABIGAIL VANITY

EDWARD MARTIN

190.143.0158

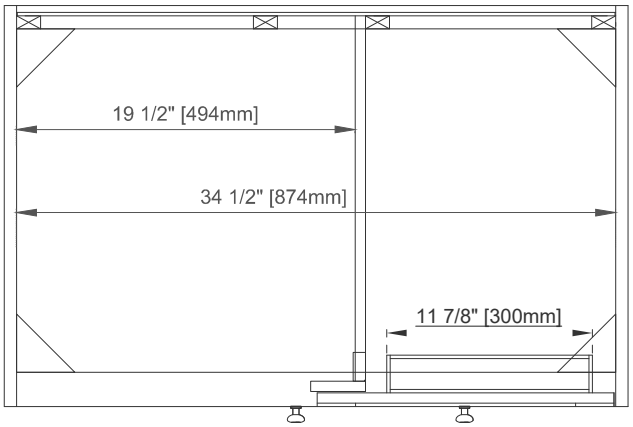

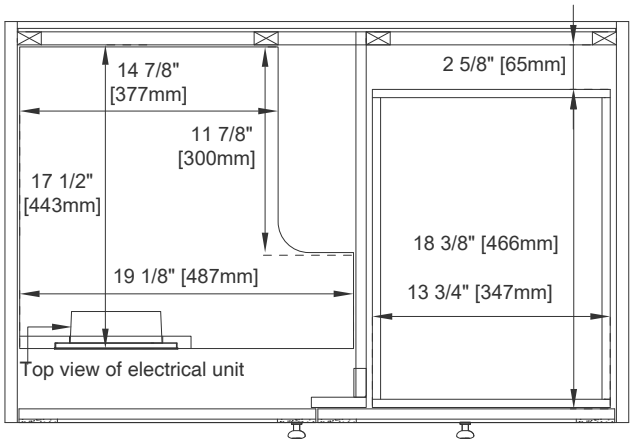

Top View

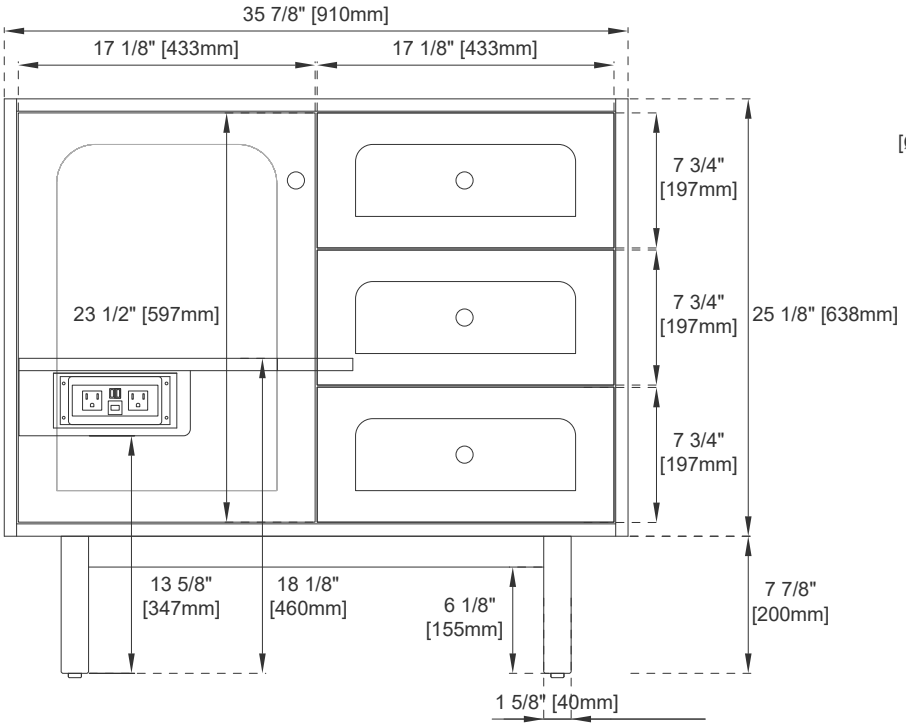

Front View

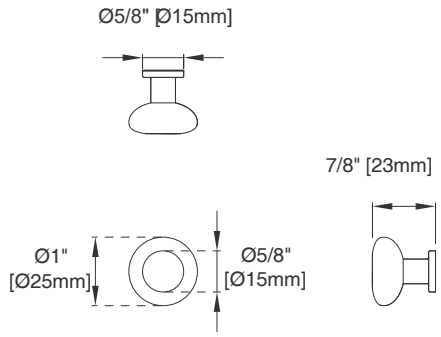

Knob

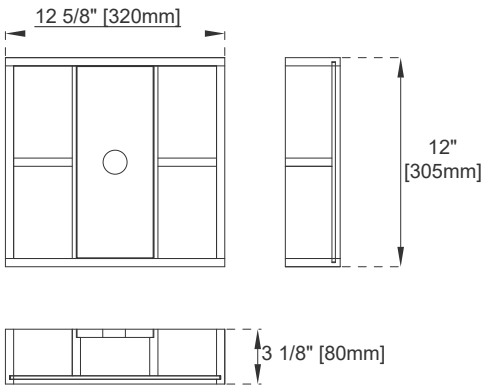

Bamboo Drawer Organizer

All dimensions and specifications are nominal and may vary. Use actual products for accuracy in critical situations. Diagrams are of cabinets only. Optional Countertops and sinks are not shown.

36" ABIGAIL VANITY

EDWARD MARTIN

190.143.0158

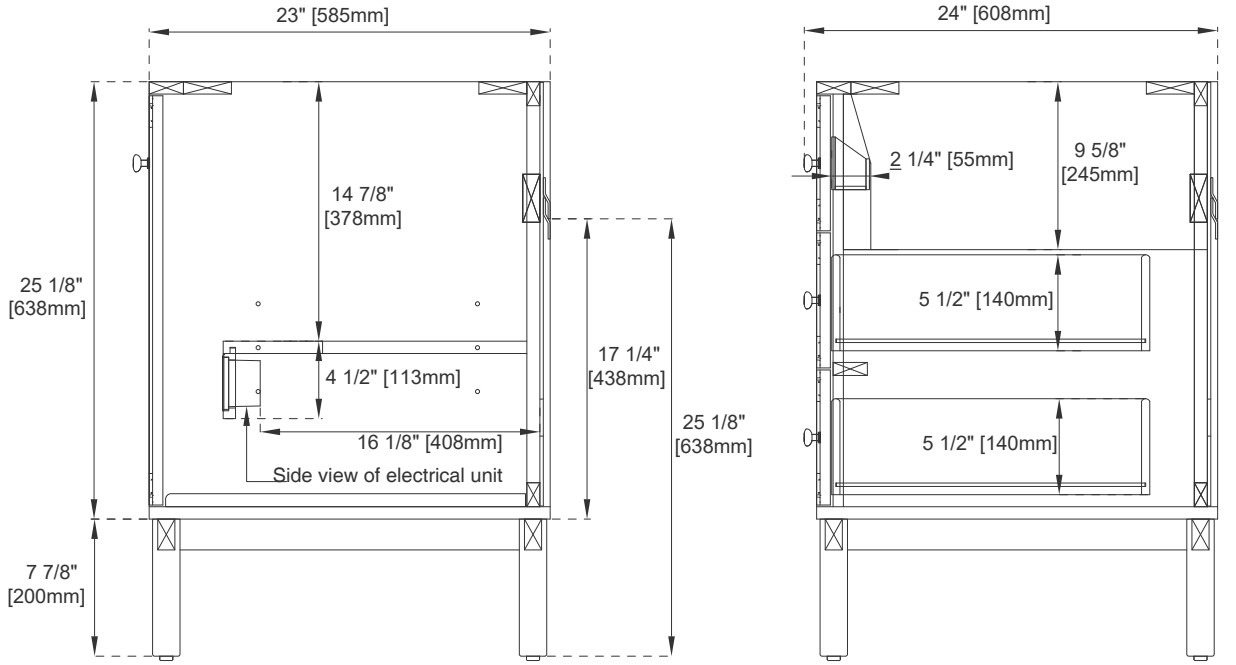

Side View

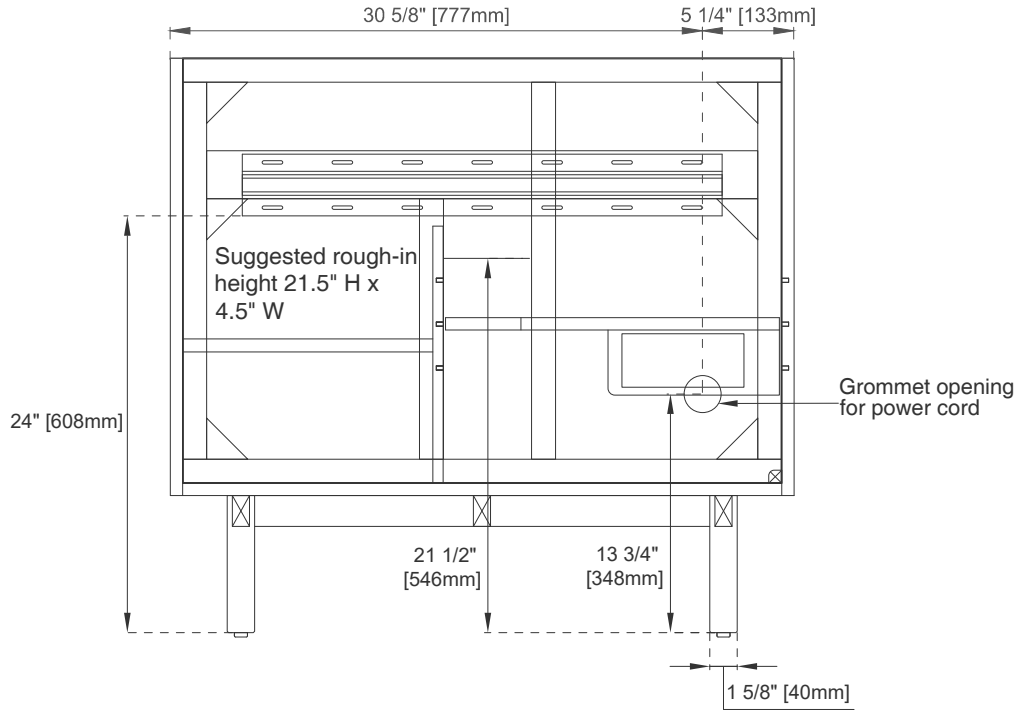

Back View

All dimensions and specifications are nominal and may vary. Use actual products for accuracy in critical situations. Diagrams are of cabinets only. Optional Countertops and sinks are not shown.