30" DEMI VANITY

EDWARD MARTIN

190.143.0061

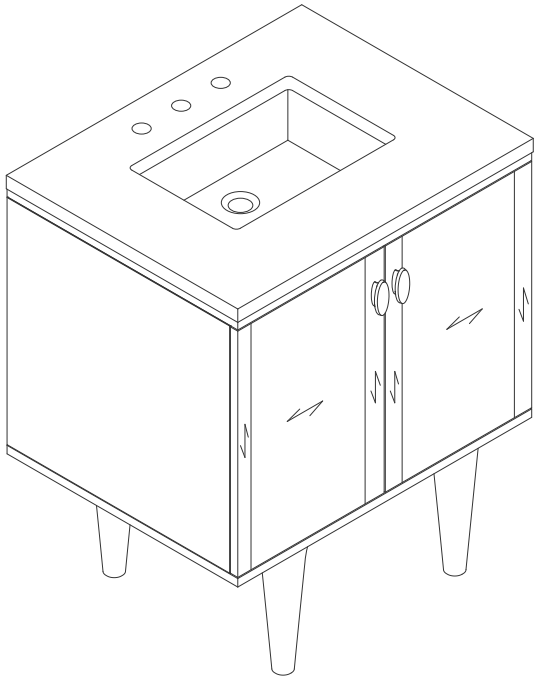

Features and Materials

Solids: Para wood and Yellow Poplar
Veneers: Quarter Cut Walnut
Panels: Plywood
Installation Type: Floor Standing with Base or Wall Mounted
Number of Basins: One, with Optional 3cm Top
Vanity Top Included: NO, Optional 3cm Tops Available with Sinks
Overflow: Yes, Front Facing
Number of Doors: Two
Number of Drawers: 0
USB/Power Component: YES (ETL5011080)
Cord Length: 6'6"
Assembly Type: Installation of Optional 3cm Top with Sink
Assembly Type: Remove Base to Wall Hang (hardware included)
Hardware Material and Finish: Zinc Alloy in Champagne Brass
Fits Drain Hole Size: 1 3/4"
European Soft Close Hinges
Adjustable Levelers

Dimension

Width: 29-7/8"
Depth: 23-1/2"
Height: 33-5/8"
Rough-In Height: 21-1/2"

30" DEMI VANITY

EDWARD MARTIN

190.143.0061

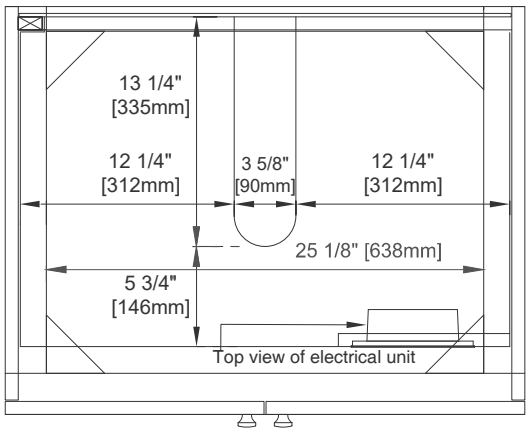

Top View

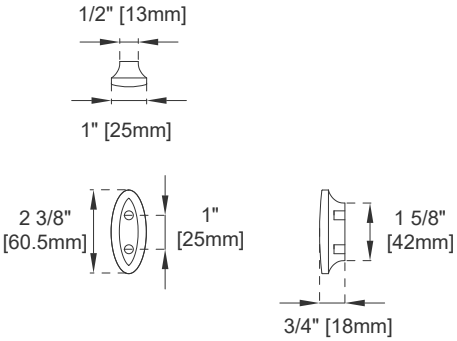

Knob

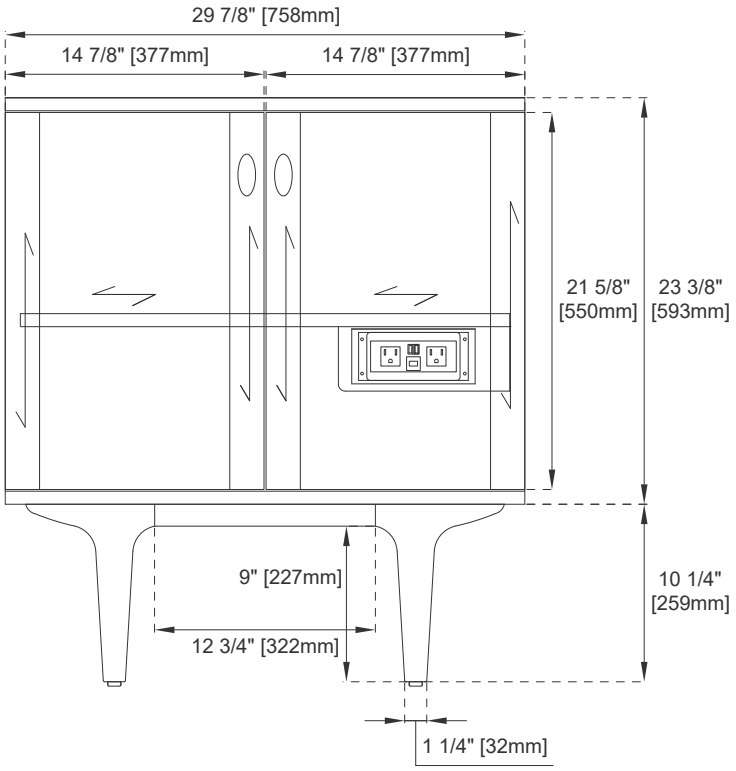

Front View

All dimensions are nominal
Diagrams are of cabinet only. Optional Countertops and sinks are not shown.

30" DEMI VANITY

EDWARD MARTIN

190.143.0061

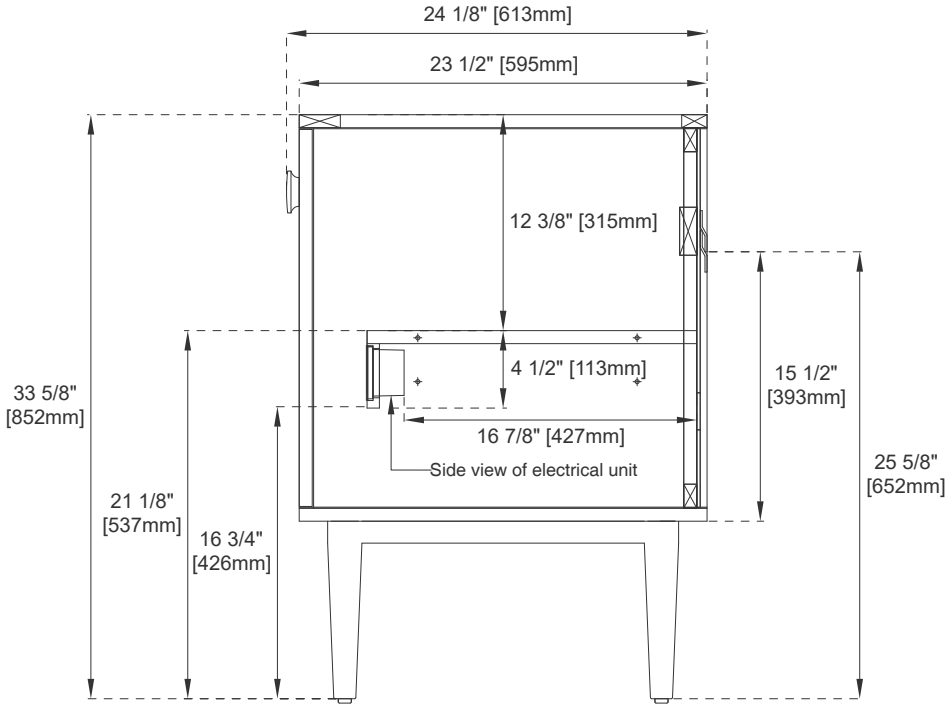

Side View

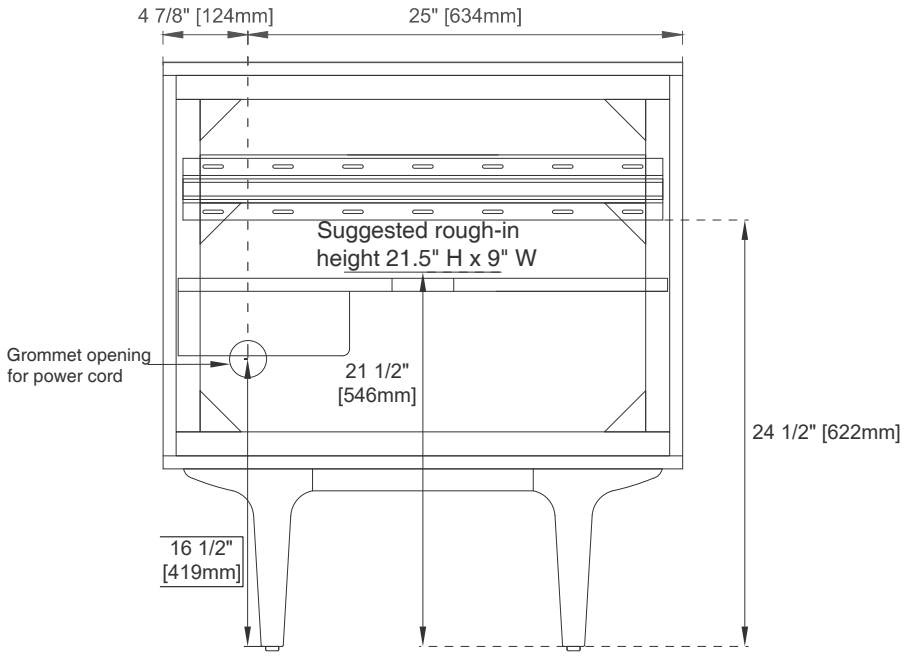

Back View

All dimensions are nominal
Diagrams are of cabinet only. Optional Countertops and sinks are not shown.