# 72" Holly Double Vanity

190.143.0049

EDWARD MARTIN

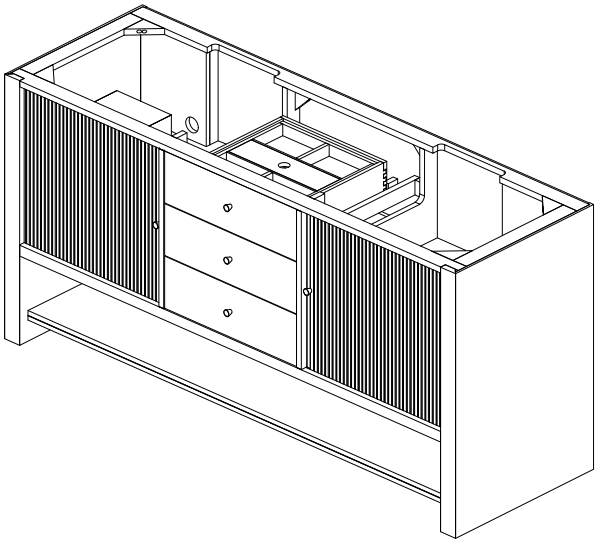

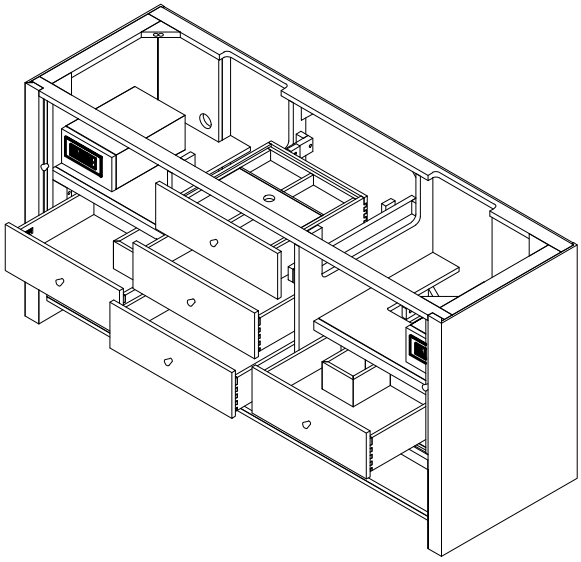

## Features and Materials

Solids: White Oak
Veneer: White Oak, Ash
Installation Type: Free Standing
Number of Basins: Two, with optional 3 cm top
Vanity Top: No,Optional 3cm Tops Available with sinks
Basins included: No
Overflow: Yes, Front Facing
Number of Doors: 12 Tambour Style
Number of Drawers: 5-Includes 1 internal drawer
Assembly Type: Installation of optional 3cm top
Assembly Type: Cabinet comes fully assembled
Removable organizer with aluminum laminate liner
Drawer Box Material and Construction: Ash veneer over Marine MDF
English Dovetail joinery
Aluminum Laminate Drawer Liners
Hardware Material/Finish: Zinc/Champagne Brass
Fits Drain Hole  Size: 1 3/4"
USB/Power Component: YES (ETL5011080)
Cord Length: 6'6"
Full Extension, Soft Close Glides
European Soft Close Hinges
Aluminum Laminate Drawer Liners
Adjustable Levelers

### Dimension

Width: 71-3/4” (1823mm)
Depth: 23-3/8” (594mm)
Height: 34-3/4” (884 mm)
Rough-In: 21-1/2” (546mm)

### Decorative Hardware

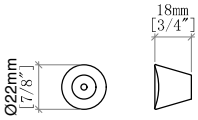




Version:202312

# 72" Holly Double Vanity

190.143.0049

EDWARD MARTIN

Drawer Organizer

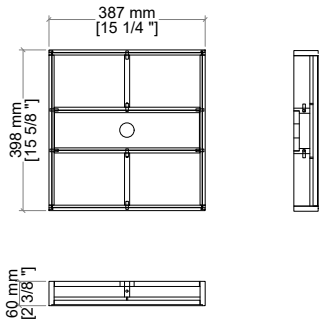


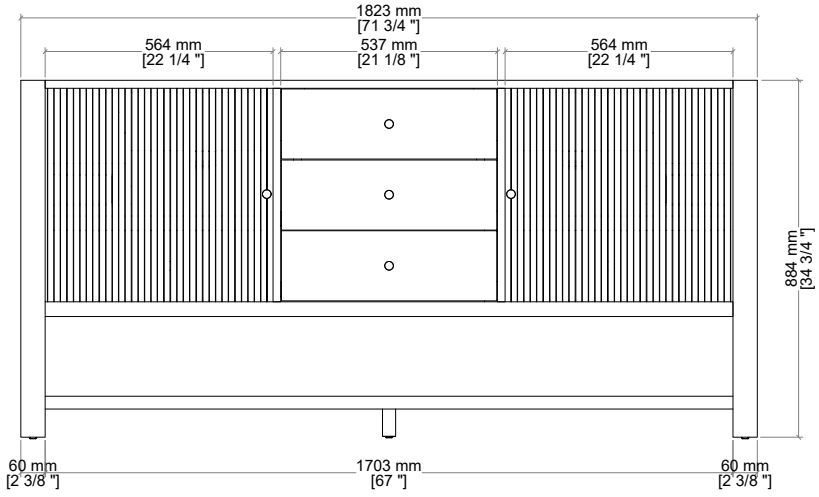


Front View

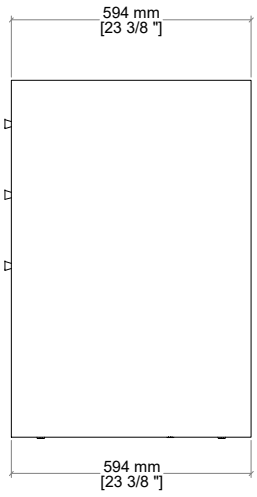


Side View

All dimensions are nominal

Diagrams are of cabinet only. Optional Countertops and sinks are not shown.

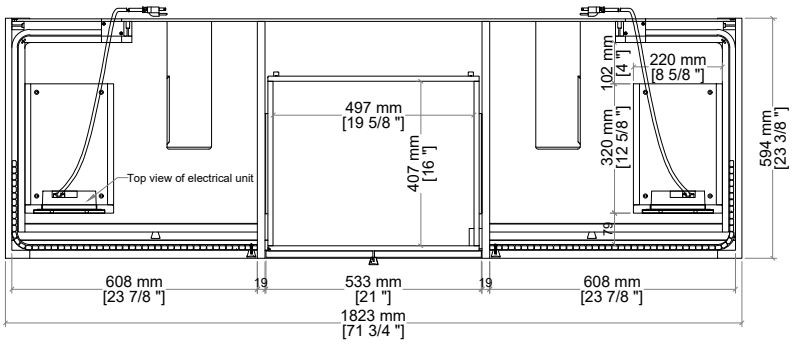


Top View

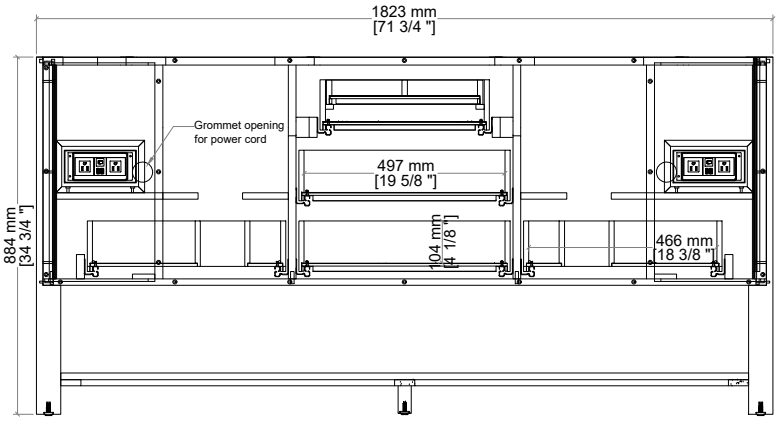


Back View

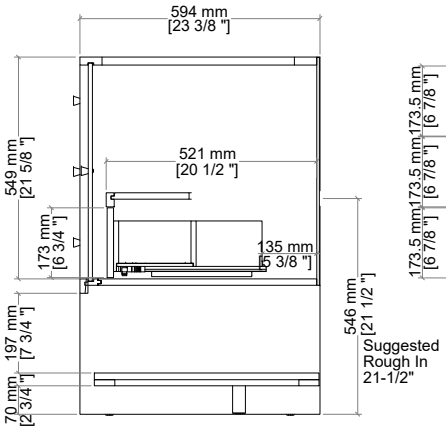


Side View 1

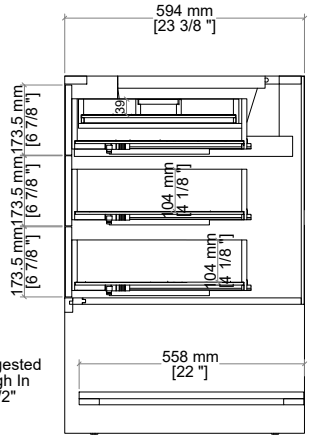


Side View 2

All dimensions are nominal

Diagrams are of cabinet only. Optional Countertops and sinks are not shown.